Mathematics

Practice Test Paper 3

(Ganita Prakash Part 2 | Chapter 2: The Baudhāyana-Pythagoras Theorem)

Class VIII | 2026–27

Time Allowed: 45 Minutes | Maximum Marks: 25

General Instructions

1. All 13 questions are compulsory. The paper has four sections: A, B, C and D.
2. Section A - 5 marks; Section B - 8 marks; Section C - 9 marks; Section D - 3 marks.
3. Choose one correct option in Section A. Show the necessary working in Sections B, C and D.
4. Study the images and graphs carefully before answering the related questions.

SECTION A

(5 questions × 1 mark = 5 marks)

1. Each side of the square is 1 unit. What is the exact length of the marked diagonal?

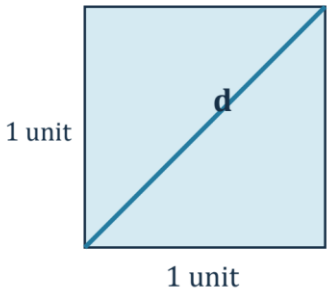

(A) 1 unit
(B) $\sqrt{2}$ units
(C) 2 units
(D) 4 units

2. A square has area 45 cm^2. What is the area of the square constructed on its diagonal?

(A) 22.5 cm^2
(B) 45 cm^2
(C) 90 cm^2
(D) 180 cm^2

3. Which operation always produces another Baudhāyana triple from an existing one?

(A) Add 2 to every number
(B) Double only the largest number
(C) Square only one number
(D) Multiply every number by 4

4. Which is equal to $\sqrt{2}$?

(A) A terminating decimal
(B) A fraction of positive integers
(C) Neither of these
(D) The integer 2

5. Who proved Fermat's Last Theorem in 1994?

(A) Andrew Wiles

(B) Euclid

(C) Bhāskarāchārya

(D) Pythagoras

SECTION B

(4 questions × 2 marks = 8 marks)

6. Find the hypotenuse of an isosceles right triangle with legs 6 cm each. Give its exact value and bounds using consecutive tenths.

7. A square has diagonal 14 cm. Find its area and exact side length.

8. Reduce (20, 48, 52) to a primitive triple. State the factor used and check the reduced triple.

9. The diagonals of the rhombus bisect each other at right angles. Use the marked lengths to find one side and the perimeter.

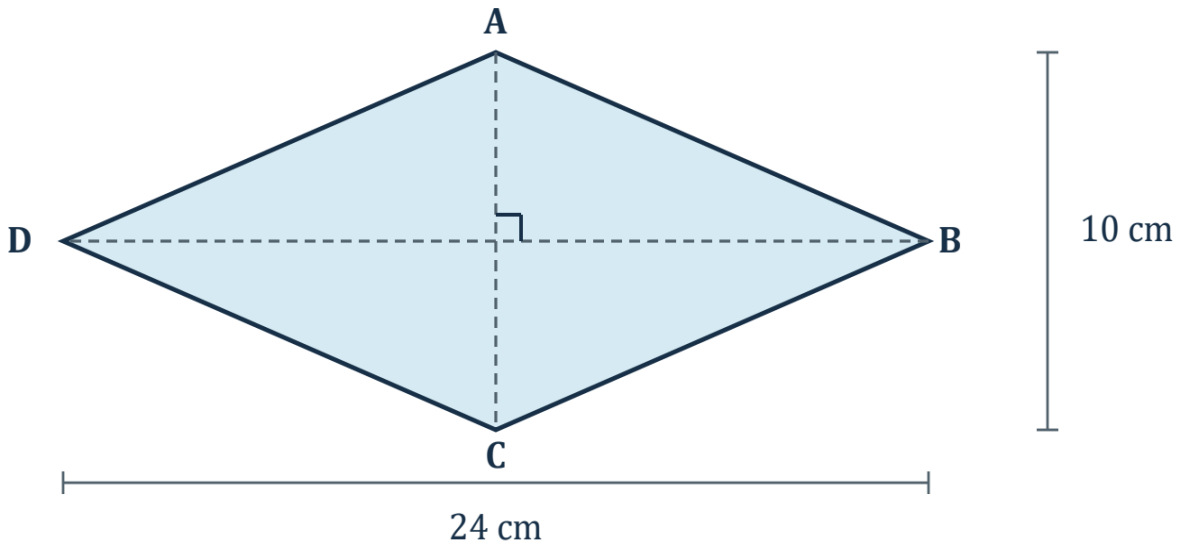

SECTION C

(3 questions × 3 marks = 9 marks)

10. A student says that the hypotenuse of a right triangle with legs 5 cm and 7 cm is 12 cm. Correct the error and find whole-number bounds for the true length.

11. A new square must have area equal to the difference of the areas of squares with sides 13 cm and 5 cm. Find its side and describe a right-triangle construction for it.

12. A pole breaks at a height of 4 m and its top touches the ground 3 m from the foot. Use the diagram to find the length of the broken part and the original height. Explain which length is the hypotenuse.

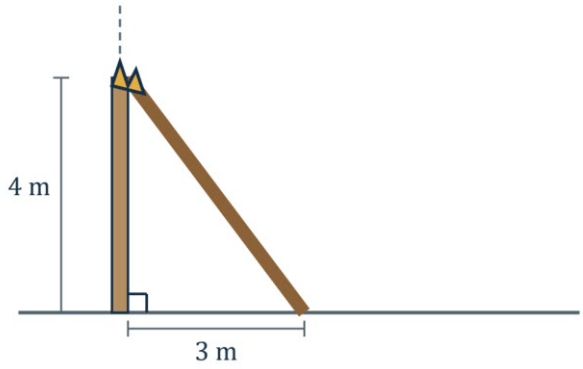

SECTION D

(Application Based Question - 3 marks)

13. A right-triangular frame is a scaled version of a frame with sides 3 cm, 4 cm and 5 cm. Its longest side is 30 cm.

(i) Find the scale factor.

(ii) Find the two shorter sides.

(iii) Find the total length of material needed for the frame.