Mathematics

Practice Test Paper 4

(Ganita Prakash Part 2 | Chapter 4: Exploring Some Geometric Themes)

Class VIII | 2026–27

Time Allowed: 45 Minutes | Maximum Marks: 25

General Instructions

1. All 13 questions are compulsory. The paper has four sections: A, B, C and D.
2. Section A - 5 marks; Section B - 8 marks; Section C - 9 marks; Section D - 3 marks.
3. Choose one correct option in Section A. Show the necessary working in Sections B, C and D.
4. Study the diagrams carefully before answering the related questions.

SECTION A

(5 questions × 1 mark = 5 marks)

1. A design repeats the same shape at one-half of the previous size. Which statement best describes this repetition?

(A) The design shows self-similarity

(B) The shapes must have equal areas

(C) The shape must be a square

(D) The small shape cannot resemble the large one

2. A closed cuboid net must contain:

(A) Six rectangles

(B) Five rectangles

(C) Eight rectangles

(D) Four rectangles

3. Name the solid shown below. Its two end faces are congruent hexagons.

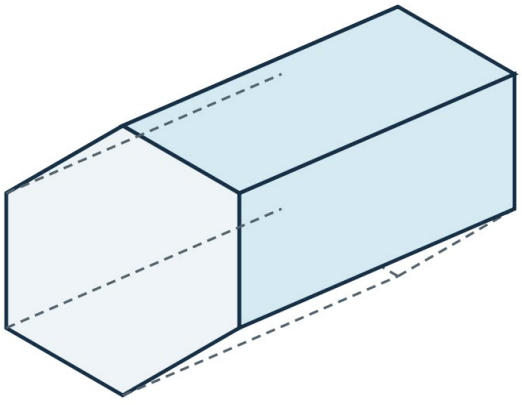

(A) Hexagonal prism

(B) Hexagonal pyramid

(C) Triangular prism

(D) Octahedron

4. A segment of length 7 cm is parallel to a plane. Its orthogonal projection on that plane is:

(A) 7 cm (B) 0 cm

(C) 14 cm (D) 3.5 cm

5. At Step 2 of a Sierpiński triangle, how many holes are there in all? Step 1 creates the first hole.

(A) 3 (B) 4

(C) 6 (D) 9

SECTION B

(4 questions × 2 marks = 8 marks)

6. The shaded triangles show Step 2 of a Sierpiński triangle. What fraction of the original triangle remains shaded, and what fraction has been removed?



7. Why is the word "isometric" suitable for a drawing of a cube in which its three edge directions are equally inclined to the viewing plane?

8. Show by counting that an n-sided pyramid has the same number of faces as vertices.

9. A thin straight rod is viewed from directly along its length and then from a direction perpendicular to its length. Describe its outline in each view. Ignore its thickness.

SECTION C

(3 questions × 3 marks = 9 marks)

10. A cylinder has base circumference 22 cm and height 8 cm. Its net is shown below. Find x and y, find the area of the rectangular part, and name the other two pieces.

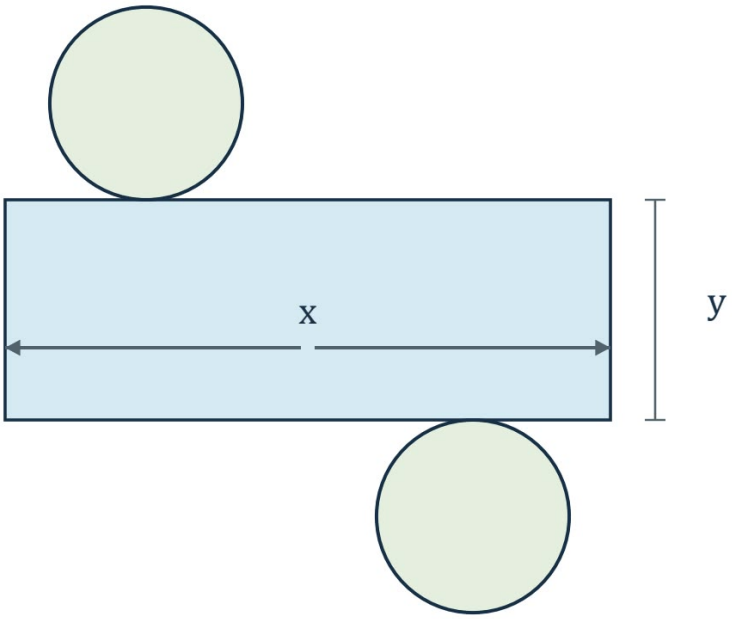

11. An ant crosses a folded edge of a box. After the two faces are opened flat, its path is a straight line. Explain why the path can look bent on the box while still being the shortest route restricted to these two faces.

12. Compare a prism and a pyramid whose bases each have 10 sides. Find the difference between their numbers of faces, edges and vertices.

SECTION D

(Application Based Question - 3 marks)

13. A self-similar branching design begins with one 8 cm stem. In each round, every tip produces two new branches, each half as long as the branch just before it.

(i) How many new branches appear in Round 3?

(ii) How long is each branch made in Round 3?

(iii) How many new branches are made in all during Rounds 1, 2 and 3?